ALLIANCE TRUSS LTD.

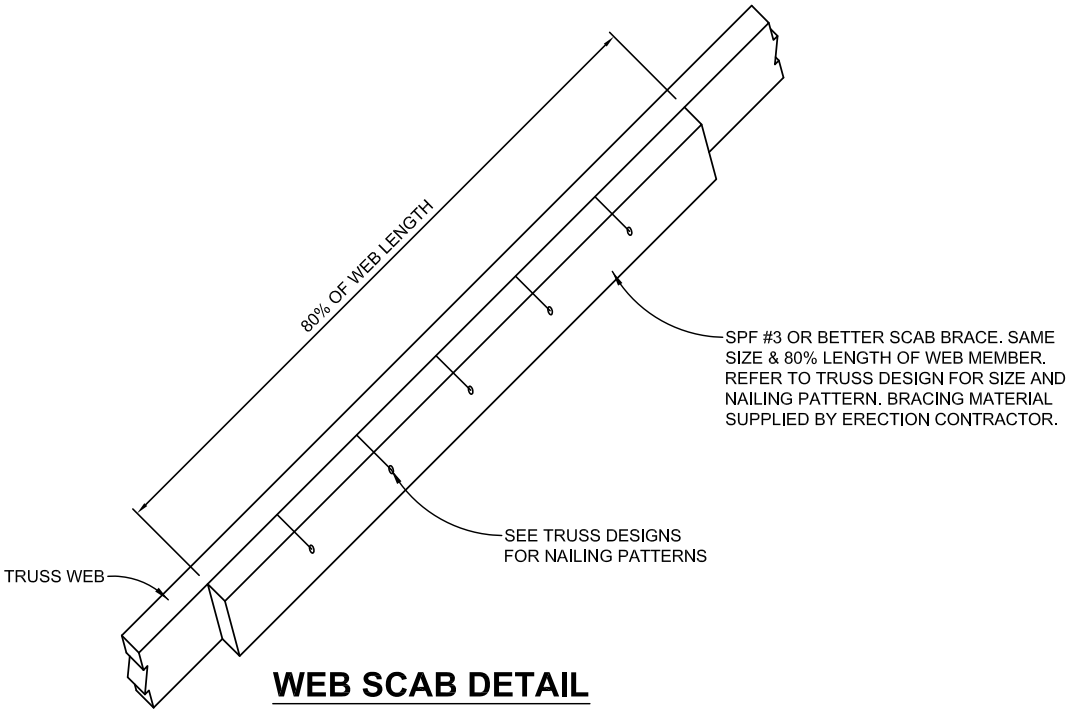

WEB SCAB DETAIL

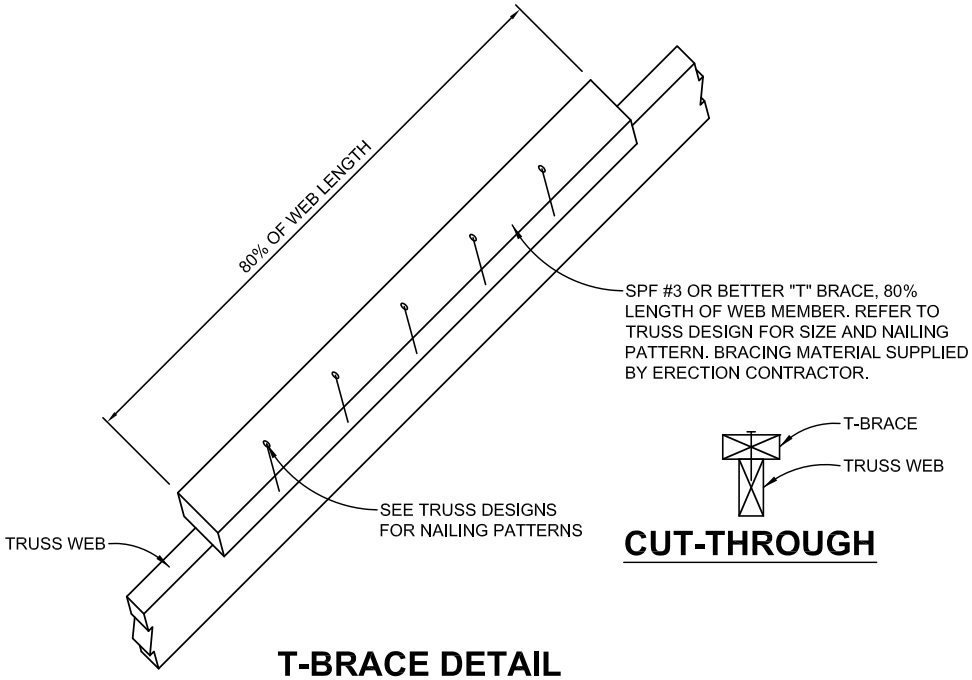

CUT-THROUGH

T-BRACE DETAIL

WEB BRACE DETAILS

NOT TO SCALE

ALLIANCE TRUSS LTD.

" Combining the Best Of "

Valley Truss Ltd.
604-574-3525
5265 - 192nd St.
Surrey, B.C.

Epic Truss Systems
604-850-3522
890 Riverside Rd.
Abbotsford, B.C.